Holmes®

Power Stand Fan

HASF99

Owner's Guide

PLEASE READ AND SAVE THESE IMPORTANT INSTRUCTIONS

PLEASE READ AND SAVE THESE IMPORTANT SAFETY INSTRUCTIONS

When using electrical appliances, basic safety precautions should always be followed to reduce the risk of fire, electric shock, and injury to persons, including the following:

1) Read all instructions before using the appliance.
2) To avoid fire or shock hazard, plug the appliance directly into a 120 V AC electrical outlet.
3) Keep the cord out of heavy traffic areas. DO NOT let the cord hang over the edge of a table or counter. To avoid fire hazard, NEVER put the cord under rugs, near heat registers, radiator, stoves, or heaters.
4) To protect against electrical hazards, DO NOT immerse in water or other liquids. Do not use near water.
5) Close supervision is necessary when any appliance is used by or near children, or by disabled people.
6) Always unplug the fan before moving it, putting on or taking off parts, cleaning, or whenever the fan is not is use. Be sure to pull by the plug and not the cord.
7) Avoid contact with moving parts. DO NOT operate without fan grills properly in place.
8) DO NOT operate any appliance with a damaged cord or plug, if motor fan fails to rotate, after the appliance malfunctions, or if it has been dropped or damaged in any manner. Return appliance to manufacturer for examination, electrical or mechanical adjustment, or repair.
9) DO NOT operate in the presence of explosive and/or flammable fumes.
10) Use appliance only for intended household use as described in this manual. Any other use not recommended by the manufacturer may cause fire, electric shock, or injury to persons. The use of attachments not recommended or sold by The Holmes Group may cause hazards.
11) DO NOT use outdoors.
12) Always use on a dry, level surface.
13) Keep unit away from heated surfaces and open flames.

PLEASE READ AND SAVE THESE IMPORTANT SAFETY INSTRUCTIONS

THIS PRODUCT IS EQUIPPED WITH A POLARIZED AC (Alternating Current) PLUG (a plug having one blade wider than the other). This plug will fit into the power outlet only one way. If the plug does not fit fully into the outlet, reverse the plug. If it still does not fit, contact qualified personnel to install the proper outlet.

DO NOT DEFEAT THE SAFETY PURPOSE OF THIS POLARIZED PLUG IN ANY WAY

14) WARNING: To reduce the risk of fire or electric shock, DO NOT use this fan with any solid-state speed control device.
15) DO NOT attempt to repair or adjust any electrical or mechanical functions on this unit. Doing so will void your warranty. The inside of the unit contains no user serviceable parts. All servicing should be performed by qualified personnel only.

ASSEMBLY INSTRUCTIONS

Figure 1

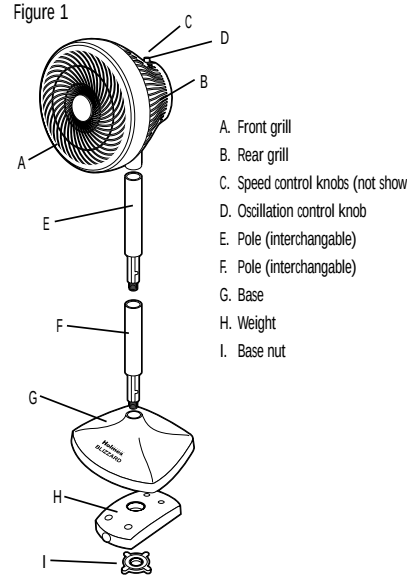

A. Front grill
B. Rear grill
C. Speed control knobs (not shown)
D. Oscillation control knob
E. Pole (interchangable)
F. Pole (interchangable)
G. Base
H. Weight
I. Base nut

Base / Pole Assembly

NOTE: Poles are the same size and are interchangeable

Step 1: Insert one of the poles through the base cover and twist the pole clockwise to lock in position. Be careful to align the cut-away grooves on the threaded joint (male end) with the two protruding raised pieces inside the hollow end of the base cover.

Step 2: Turn the base cover upside down (with the top of the pole you just inserted facing the floor) and place the weighted insert into the base cover. The pole threads will be exposed as they protrude through the insert.

NOTE: HOLD THE POLE, BASE COVER AND WEIGHTED INSERT IN ONE HAND WHILE TIGHTENING THE BASE NUT WITH THE OTHER HAND.

Step 3: Place the base nut on the threaded section and hand-tighten the base nut to securely fasten the lower extension pole to the base.

Step 4: Insert the other pole with the threaded joint (male end) into the hollow end of the lower pole (female end), until both poles meet. Be careful to align the cutaway / grooves on the threaded joint (male end) with the two protruding pieces inside the hollow end of the lower pole (female end).

Step 5: Turn the upper pole clockwise to lock it securely in place.

Final Assembly

Step 1: Insert the neck of the fan head into the hollow end of the pole and turn the neck clockwise to lock into place.

OPERATING INSTRUCTIONS

Step 1: Set the fan base on a dry, level surface.

Step 2: Please make sure the On/Speed knob is in the "Off" or "0" position. Plug the cord into any standard 120-volt A/C outlet.

Step 3: The SPEED is adjusted by moving the knob left or right to the desired setting.

Step 4: The OSCILLATION control knob is located on the top of the fan motor housing. To start oscillation, push control knob down. To stop oscillation, pull control knob up.

ADJUSTMENT INSTRUCTIONS

Height Adjustment

This fan is equipped with two poles, which allow you to adjust the height of the fan for three height settings.

Tilt Adjustment

To change the tilting angle of the fan head, move the fan head to the desired angle.

CLEANING / MAINTENANCE

Follow these instructions to correctly and safely care for your Holmes Power Stand Fan. Please remember:

- Always unplug the fan before cleaning or disassembling.
- Do not allow water to drip on or into the fan motor housing.
- Do not use any of the following as a cleaner: gasoline, thinner, benzine.
- We also recommend the periodic cleaning of this fan by lightly running a vacuum cleaner nozzle over the fan grill to remove any dust or dirt that may have accumulated inside or on the unit

FAN STORAGE

Your fan can be stored in the off-season either partially disassembled or assembled. It is important to keep it in a safe, dry location.

- If stored disassembled, we recommend using the original (or appropriately sized) box.
- If stored assembled or partially assembled, remember to protect the fan head from dust.

WARRANTY INFORMATION

SERVICE INSTRUCTIONS

1. Do NOT attempt to repair or adjust any electrical or mechanical functions on this unit. Doing so will void the warranty.
2. If you have any questions regarding this unit's operation or believe any repair is necessary, please write to our consumer service department.
3. If you need to exchange the unit, please return it in its original carton, with a sales receipt, to the store where you purchased it. If you are returning the unit more than 30 days after the date of purchase, please see the enclosed warranty.
4. If you have any other questions or comments, please write:

The Holmes Group, Inc.
CONSUMER SERVICE DEPARTMENT
P.O. Box 769,
Milford, MA 01757-0769

or visit our website at www.holmesproducts.com

For your own records, staple or attach your sales receipt to this manual. Also, please take a moment to write the store name/location and date purchase below.

STORE NAME: _____

LOCATION: _____

DATE PURCHASED: _____

(STAPLE RECEIPT HERE)

THREE (3) YEAR LIMITED WARRANTY

SAVE THIS WARRANTY INFORMATION

A. The quality controls used in the manufacture of this Holmes product are to ensure your satisfaction.

B. The Warranty Registration Card enclosed with this product must be completed and returned within 10 days of purchase for your Warranty to be effective. This Warranty applies only to the original purchaser of this product.

C. This Warranty applies ONLY to repair or replacement of any supplied or manufactured parts of this product that, upon inspection by Holmes authorized personnel, proves to have failed in normal use due to defects in material or workmanship. Holmes will determine whether to repair or replace the unit. This Warranty does not apply to installation expenses.

D. Operating this unit under conditions other than those recommended or at voltages other than the voltage indicated on the unit, or attempting to service or modify the unit, will render this WARRANTY VOID.

E. Unless otherwise proscribed by law, Holmes shall not be liable for any personal injury, property or any incidental or consequential damages of any kind (including water damage) resulting from malfunctions, defects, misuse, improper installation or alteration of this product.

F. All parts of this Holmes product are guaranteed for a period of 3 years as follows:

1. Within the first 30 days from date of purchase, the store from which you purchased your Holmes product should replace this product if it is defective in material or workmanship (provided the store has in-stock replacement.)
2. Within the first 36 months from date of purchase, subject to the conditions in paragraph H, Holmes will repair or replace the product if it is defective in material or workmanship providing it is returned to Holmes, freight prepaid, with PROOF OF PURCHASE date, together with $7.50 for handling and return packing/shipping charges.

G. If you have any problem with this product, please write to our Consumer Service Dept.

H. IMPORTANT Return INSTRUCTIONS Your warranty depends on your following these instructions if you are returning the unit more than 30 days after the date of purchase:

1. Carefully pack the item in its original carton or other suitable box to avoid damage in shipping.
2. Before packing your unit for return; be sure to enclose:
   a) Your name, full address with zip code and telephone number,
   b) A dated sales receipt or PROOF OF PURCHASE,
   c) Your $7.50 check for return packaging, and
   d) The model number of the unit and the problem you are having. (Enclose in an envelope and tape directly to the unit before the box is sealed.)
3. Holmes recommends you insure the package (as damage in shipment is not covered by your warranty).
4. All shipping charges must be prepaid by you (as noted in paragraph F).
5. Mark the outside of your package:

HOLMES
THE HOLMES GROUP, INC.
CONSUMER RETURNS
32 B SPUR DRIVE
EL PASO, TX 79906
SHIPPING AND HANDLING CHARGES: $7.50

This warranty gives you specific legal rights, and you may have other rights which vary from state to state. The provisions of this warranty are in addition to, and not a modification of, or subtraction from, the statutory warranties and other rights and remedies contained in any applicable legislation. To the extent that any provision of this warranty is inconsistent with any applicable law, such provision shall be deemed voided or amended, as necessary, to comply with such law.

JOB#HASF99.01.US.OM1 HASF9901UM1 Printed in China